HEAVY VEHICLES

PURPOSE AND SCOPE

The Primary Standard details the FSR controls and minimum requirements to eliminate or minimise risks associated with the use, and Load/Unload activities of heavy vehicles that occur in Laing O'Rourke Workplaces.

Section 1 – 'Requirements' in this document is Mandatory and must be achieved across all Laing O'Rourke Workplaces. Where alternative controls are implemented, these must be approved through the FSR/HSEMS Requirement Dispensation process.

Section 2 – 'How to Comply' in this document provides information and guidance on how to comply with the requirements. Laing O'Rourke Workplaces are required to follow this guidance or achieve an equivalent or higher level of safety/outcome, documenting alternatives in the Project Risk Assessment and/or WHS Management Plan.

Definitions are detailed in Appendix 1 - Definitions

REQUIREMENTS

PLANNING WORK

FSR A Chain of Responsibility Management Plan is in place for the safe operation of heavy vehicles.

- As a minimum, Chain of Responsibility Management Plans must address management of:
  - Who is accountable for each role in the supply chain;
  - How risks associated with; mass, dimensions, loading/unloading including Load Restraint, fatigue, speed, vehicle maintenance and route compliance will be managed.
  - How assurance/monitoring activities will be completed, e.g. frequency of random and/or targeted inspections, requirements for third party verifications etc; and
  - Any additional standard operating procedures required to safely manage heavy vehicle requirements for the site/location/contract.
- Heavy Vehicle Risks must be assessed in a project CoR/HVNL Risk Assessment, or embedded in the Project Risk Assessment.

FSR Loading Manager roles and responsibilities are assigned at each worksite to manage and coordinate loading and unloading activities.

FSR Drivers of heavy vehicles must hold the appropriate licence for the class of vehicle being operated.

FSR All personnel involved in applying or removing load restraint equipment, or supervising these activities, must be trained in load restraint.

- Where unloaded items require temporary support to prevent collapse or structural failure events, temporary works designs, processes and any associated approvals apply. (e.g. Precast Concrete Elements)

FSR Confirm an engineered load restraint design is in place for all *non-standard loads*.

- Non-standard loads are freight items that:

  - Have uneven weight distribution / Centre of Gravity that is likely to adversly effect load stability during transport or the application/removal of load restraints; or
  - Require the use of non-standard Load restraint methods or equipment; or
  - Requires increased understanding or judgement by the person completing restraint beyond what is provided in load restraint training.
- Loads restraint scenarios that are covered by the NTC Load restraint guide are considered to be compliant with the FSR requirement for load restraint design.

FSR Verify that all required transport permits are in place before transporting over-mass or over-dimension loads.

- CoR Training requirements must be identified in project TNA's, and as a minimum identify the requirement for people involved in the Chain of Responsibility to complete CoR Awareness Training.
- Heavy Vehicle assurance/monitoring activities must be included in the project 30-60-90 assessment. As a minimum, this must include a representative sample of the following:
  - Fatal and Severe Risk (FSR) Heavy Vehicles
  - Fatigue Management Inspection Checklist
  - Load Restraint Inspection Checklist

MASS AND DIMENSION INSPECTION CHECKLIST

  - Vehicle Condition Inspection Checklist

EXECUTING WORK

FSR Verify vehicle height, width, length, and mass are within legal limits and relevant permit conditions before departing site.

FSR Address and report any visible signs of impairment, including fatigue, with the driver and notify the transport operator.

FSR Restrict unnecessary personnel from entering truck loading and unloading areas with signage and delineation.

FSR Establish a delineated exclusion zone to prevent people accessing the blind side of the truck when loading and unloading with mobile plant.

FSR Drivers must remain in a designated safe zone, such as the cab or a marked position, during all loading and unloading activities.

FSR Tipper trucks/trailers must only discharge materials in designated tipping zones with exclusion zones in place to prevent access to the rollover zone.

FSR Clearly identify overhead powerlines at site entry/exit points and along internal travel routes using signage, visual markers, and height indicators.

- Falls risks associated with vehicle loading and unloading activities must be assessed and managed, including consideration for how load restraints and loads will be removed by the goods receiver.

FACILITIES, INSTALLATIONS, PLANT AND EQUIPMENT

FSR Report any defects affecting the roadworthiness of a vehicle to the transport operator.

FSR Heavy vehicle operators must implement and monitor In-Vehicle Monitoring Systems (IVMS).

- For LOR Supply Chain Vehicles, this requirement is subject to transition planning and must be achieved by 1 April 2027.

- For owner operator vehicles where the owner is the primary driver, the requirement for IVMS does not apply, as they would only be monitoring their own activity.

FSR Inspect load restraint gear for signs of damage or wear before use.

- Sites/facilities must have controls to enable safe loading, unloading and movement of heavy vehicles must be implemented, including:
  - Separation of pedestrians and vehicles;
  - Designated areas for safe loading and unloading;
  - Height access equipment (where required);
  - Materials handling equipment, e.g. pallet jacks, forklifts, gantry cranes etc; and
  - Amenities for drivers.
- Heavy vehicle operators must be provided with a minimum specification that vehicles are expected to achieve, taking risks to vulnerable road users, intended use and other hazards identified in the Project Risk Assessment into account.

HOW TO COMPLY

This section provides information and guidance on how to comply with Section 1- 'Requirements' of this document. Laing O'Rourke Workplaces are required to follow this guidance or achieve an equivalent or higher level of safety/outcome, documenting alternatives in the Project Risk Assessment and/or WHS Management Plan.

TABLE OF CONTENTS

1.0 Risk Management 5
1.1 Engineered Safety 7
1.2 Chain of Responsibility Management Plan 8
2.0 Training and Competency 8
2.1 Driver Training and Inductions 9
3.0 Management of Loading/Unloading 9
3.1 Loading Managers 9
3.2 Completing loading/unloading activities 9
3.3 Management of Unsafe or Non-compliant Conditions 9
3.3.1 Arrival of unsafe load 10
3.3.2 Arrival of unsafe vehicle 10
3.3.3 Management of at risk drivers 10
3.4 Loading and unloading Exclusion Zones (LUEZ) 10
3.4.1 Driver Safety Zones 11
3.5 Load Restraint 12
3.5.1 Engineered Load Restraint 12
3.6 Recording Loads 13
3.6.1 Container Weight Declaration (CWD) 13
4.0 Additional Requirements 13
4.1 HVNL Self-Assessment Gap Analysis Tool 13
4.2 RACI – Responsible Accountable Consulted OR Informed 14
4.3 Supply Chain Contracts 14
5.0 Assurance 14
5.1 Monitoring and Inspection 14
6.0 Roles and Responsibilities 15
7.0 Assessment Guides 16
8.0 Regulations, Codes and Standards 16
9.0 Compliance and Assurance Reference 16
10.0 Additional Information 16
11.0 Plans, Forms and Templates 16
12.0 Appendices 16
12.1 Appendix 1 – Definitions 17
12.2 Appendix 2 - Tipper Guidance 18

1.0 RISK MANAGEMENT

A risk assessment must be carried out to determine the level of risk to workers and the type(s) of control method/s or protection to be provided. This risk assessment will be conducted in accordance with **System Requirement Risk Assessment and SiD**.

Heavy Vehicle Risk Management Processes are aimed at eliminating/reducing risks associated with heavy vehicle operations, including minimise the risks associated with:

- **Mass** – risks minimised using load plans, pay load registers, container weight declarations, booking procedures, regular inspections, dispatch manifests use of weight scales and weigh bridges, awareness of the GVM, allowable axel weights and payload.
- **Dimension** – risks minimised using load plans, booking procedures, over-dimensional permits, route-planning, and plant and equipment specifications.
- **Load Restraint** – risks minimised using loading and restraint guidance, load safety inspection checklist, equipment pre-start checklist, load restraint training.
- **Fatigue** – prevented and monitored using driver schedules, route planning, journey management plans, work diaries, timesheets, loading and unloading time's guidance.
- **Speed** – prevented and monitored using In Vehicle Management System (IVMS), speed management review checklists, driver schedules and timeslot management, vehicle speed limiters, education and awareness training/toolbox talks.
- **Maintenance and Vehicle Standards** – safe to operate on roads, regular maintenance and roadworthiness check.
- **Route Compliance** – risks minimised by ensuring approved haulage routes are identified, communicated and followed.

Risk Assessments should consider the risk management guidance below, seeking opportunities to eliminate/reduce the risks associated with heavy vehicles where practicable, including:

Type of control	Example
▼ Elimination	**Remove the heavy vehicle hazard entirely (highest order).** • Eliminate on-site heavy vehicle movements by: – using **off-site prefabrication/modularisation** and delivering install-ready components – using **supplier direct-to-point-of-use delivery** to avoid double-handling and internal truck shuttles – using **permanent/temporary fixed pipelines/conveyors** (e.g., concrete pumping line, spoil conveyor) instead of truck movements where feasible • Eliminate reversing – one-way site circulation loop so trucks **drive through** and exit forward – designated **turning heads** so no reverse manoeuvres required at unloading points – "no reverse into live work areas" design rule • Eliminate pedestrian exposure – no pedestrian access to active load/unload zones during delivery windows – remote check-in / remote induction / geofenced waiting bays so drivers do not enter workfaces on foot • Eliminate mixed traffic at peak times – no heavy vehicle access during shift start/finish, crib breaks, school/public peak interface periods (where possible)
▼ Substitution	**Replace with a safer method, vehicle, or process.**

Type of control	Example
	• Substitute vehicle type – smaller rigid vehicles instead of articulated vehicles where route/site geometry is constrained – use **walking-floor / live-bottom trailers** (where appropriate) to reduce tipping/overturn risks versus tippers in unstable or overhead-restricted areas • Substitute manual paperwork / check-in – QR / app-based delivery booking and gate check-in to reduce driver movement around gatehouses and queues • Substitute high-risk delivery timing – daylight deliveries instead of low-light/night deliveries (unless a controlled closure makes night safer)
▼ Isolation	**Separate heavy vehicles from people / other traffic / hazards.** • Physical separation of pedestrians and vehicles – hard barriers (not just cones) between walkways and haul/delivery routes – dedicated pedestrian crossings with gates/boom control – overhead or segregated walkways at logistics hubs (Safe Work Australia and regulator guidance emphasises separation) • Dedicated heavy vehicle routes – separate entry/exit gates for heavy vehicles and light vehicles – segregated internal routes for deliveries, spoil haulage, fuel/servicing – no heavy vehicles through shared amenities/carpark zones • Load/unload exclusion zones – barricaded exclusion zones around tipping, crane unloading, forklift/telehandler pick zones – "driver safe standing zone" clearly marked and protected – no unauthorised personnel in blind-side areas of trucks/loaders • Isolation from unstable ground / edges / overhead hazards – barricade no-go zones near excavations, batters, soft shoulders, suspended slabs, overhead powerlines/structures – fixed stand-off distances and physical stops at edges/tipping points • Isolation of visiting drivers – holding area/staging yard outside live site, released only when unloading area is ready
▼ Engineering Controls	**Modify plant/vehicles/workplace to reduce risk.** • Vehicle safety technology / equipment • Reversing cameras + proximity sensors (rear and side) • 360° camera systems / blind-spot detection • Audible and visual movement alarms (reversing and turning) • Speed limiters / telematics geofenced speed controls in site/logistics yards • Automatic emergency braking / collision mitigation (where fitted and suitable) • In-cab fatigue / distraction monitoring systems (for line-haul/long-haul interfaces) • Tyre pressure monitoring (reduces blowout / loss-of-control risk) • Load restraint hardware fit-for-purpose (rated anchor points, gates, stanchions, restraint systems) consistent with NHVR load restraint expectations/guidance • Truck body / load stability engineering • Slip liners on tipper trucks to reduce friction - Helps material discharge more cleanly, reducing hang-up/uneven load release and lowering risk of sudden shift during tipping.

Type of control	Example
	• Body props / tip-over warning systems / inclinometer alarms on tippers • Tailgate locking indicators / interlocks • Load covers / containment systems to prevent load loss/dropped objects • Anti-slip access and compliant access ladders/platforms for inspection tasks • Underrun / impact protection • Rear impact guards / conspicuity markings to improve visibility and crash outcomes. • Site infrastructure engineering • Wheel stops / dock restraints / truck restraint systems at loading bays • Interlocked gates / boom gates controlling entry to loading zones • Traffic lights at single-lane pinch points • High-output lighting at gates, weighbridges, load/unload zones • Road surface engineering (grade, drainage, pavement strength, anti-skid treatment) to reduce rollover/slip/loss-of-control • Physical height restrictors / overhead warning bars before low-clearance zones
▼ Administrative Controls	**Systems, planning, rules, training, supervision (important, but lower order than above).** • Planning / governance (CoR + project controls) • Procedures / rules – Standard delivery & unloading procedure – No-go / no-stand zones – Spotter / traffic controller rules – Site rules, including reversing protocols – Load restraint inspections – Fatigue and scheduling controls – Weather controls • Competency / communication – Site-specific driver induction – Verification of competency / licences – Toolbox talks focused on vehicle-pedestrian interface – Multilingual signage and induction material – Supervisor inspections / audits
▼ PPE	**Last line of defence (does not control vehicle energy itself).** Standard site PPE requirements. PPE should support, not replace, separation and engineering controls.

1.1 ENGINEERED SAFETY

Engineered Safety in Practice (examples):

- using **off-site prefabrication/modularisation** and delivering install-ready components
- using **supplier direct-to-point-of-use delivery** to avoid double-handling and internal truck shuttles
- Engineer level loading bays, integrated restraint systems, and clear separation from pedestrians
- Select packaging, unit sizes, and component designs that eliminate / minimise hazardous manual handling
- Specify transport methods and delivery schedules that eliminate fatigue or time pressures
- Consider loading, securing and unloading methods without climbing on trucks or relying on personal judgement by providing appropriate tools and equipment in the work planning stage

1.2 CHAIN OF RESPONSIBILITY MANAGEMENT PLAN

A Chain of Responsibility Management Plan (CoRMP) shall be developed using the Chain of Responsibility Management Plan template on HSEMS or equivalent to describe how project and supply chain CoR related responsibilities are to be identified, assigned, and addressed within the Project / Workplace Risk Assessment.

The CoRMP shall give due consideration to, and may incorporate, the risks and controls within:

- Project Risk Assessments
- Project / Construction Management Plans
- WHS Plans
- Contractor Management Plans
- Fatigue Management Plans
- Maintenance Management Plans
- Procurement Management Plans
- Logistics Management Plans

The CoRMP must define the roles, responsibilities and training requirements for all persons within the CoR including where the supply chain has a responsibility and accountability as identified in the project CoR risk assessment and listed below.

Review of the CoRMP and associated documents (i.e. risk assessment and training needs, assurance checklists) will be at the same intervals as the worksite/project Construction Health and Safety Plan as a minimum or as conditions change. Reviews should include consultation with workers and consider hazard identification, risk assessment, control measures, and changes to other management plans.

The Project/Workplace Leader will review and approve the CoRMP prior to its use.

2.0 TRAINING AND COMPETENCY

Roles in the Chain of Responsibility must be identified as part of the Project/Worksite TNA, and as a minimum identify the following requirements:

ROLE	Competency Requirements
People with a role in the Chain of Responsibility (including the roles below)	• LOR Online Chain of Responsibility Operational Awareness Course
Consignor/Consignee /Scheduler	• Chain of Responsibility Awareness for Administrative Staff
Driver	• LOR Online Chain of Responsibility Operational Awareness Course, or equivalent supplied by the Driver's employer. • Relevant Class of Licence for Vehicle being operated. • Loader/Unloader role training where they act in this capacity. • Site/Project Driver Induction.
Loading Manager	• **TLIF0009** Ensure the safety of transport activities (Chain of Responsibility) • **TLIF0014** Monitor the safety of transport activities (Chain of Responsibility)

Loader/Unloader	• **TLID0015** Load and unload goods/cargo. • **TLIA1001** Secure cargo or equivalent.

2.1 DRIVER TRAINING AND INDUCTIONS

- Delivery drivers or contractor drivers that are used by Laing O'Rourke or partners and attend Laing O'Rourke workplaces will complete the site/workplace specific driver induction and records of that induction will be kept on-site.
- The induction must include the worksite/project CoR measures.

3.0 MANAGEMENT OF LOADING/UNLOADING

Loading and unloading activities must be planned between the people involved. This includes the parties (typically the transport operator, and the site supervisor coordinating the transportation) agreeing on:

- The availability of loading and unloading equipment to enable safe loading/unloading and material handling e.g. forklift, crane, reach stacker, pallet trolleys etc;
- Any specific equipment required to unload the vehicle, including having competent people available to operate the equipment the equipment if required;
- Communication and coordination of the delivery e.g. estimated arrival times, contact details of delivery drivers and persons accepting the materials etc.;
- Site requirements e.g. loading and unloading exclusion zones, inductions, site rules.

3.1 LOADING MANAGERS

A loading manager must be nominated and documented in the CoRM Plan, or agreed alternative, e.g. WHS Management Plan for Small Projects.

The Loading Manager is responsible for setting the expectations that loaders, unloaders and packers work to, for overseeing the loading/unloading practices on the site to verify that they meet the requirements of this Procedure and broader HVNL requirements.

Loading managers do not need to be a dedicated role and may form part of a person's broader duties. E.g. Logistics Manager, Warehouse Supervisor etc.

3.2 COMPLETING LOADING/UNLOADING ACTIVITIES

When completing loading/unloading activities:

- Vehicles must be loaded in a safe and secure manner, and not exceed the legislative or the manufacturer's requirements for mass and dimension limits;
- The load must be placed in or on the vehicle in such a way that it does not adversely affect the vehicle's stability, steering and/or braking performance;
- The load must be secured/restrained to prevent it becoming dislodged or falling from the vehicle; and
- The load must not project from the front, sides or rear of the vehicle, without assessing the associated risks, and implementing additional controls e.g. visual flags.

3.3 MANAGEMENT OF UNSAFE OR NON-COMPLIANT CONDITIONS

The following unsafe conditions must be monitored and managed on each project/site.

3.3.1 ARRIVAL OF UNSAFE LOAD

If an unsafe load arrives on site, the following must be completed:

- Stop unloading from taking place;
- Report details of unsafe load to the Transport Operator and Report as an Incident in Synergy; and
- Work with the Transport to determine a safe methodology to unload the vehicle on-site.

NOTE: Where practicable, do not permit an identified unsafe load leave the project/site.

3.3.2 ARRIVAL OF UNSAFE VEHICLE

If an unsafe vehicle arrives on site, the following must be completed:

- Stop the driver from operating the vehicle on-site;
- Report details of unsafe vehicle to the Transport Operator and Report as an Incident in Synergy; and
- Work with the Transport to determine how the vehicle will be rectified before being permitted to leave site/ re-access public roads.

3.3.3 MANAGEMENT OF AT RISK DRIVERS

People that interact with drivers of heavy vehicles must take reasonable steps to observe signs of impairment, and raise any concerns about Fatigue, Drugs or Alcohol.

If concerns are observed, the following steps must be taken:

- Request that the driver stops.
- Report the concerns to the Loading Manager.
- The Loading Manager must:
  - Request that the driver remains on site, including the provision of an appropriate place to rest;
  - Contact the driver's employer and advise of the concerns;
  - Not allow the driver to operate their vehicle until they are satisfied that it is safe to do so; and
  - Contact the relevant authority if the concern relates to impairment from Drugs or Alcohol.
- Once the situation has been managed, the event must be reported by the site/project team in Synergy as an Incident.

3.4 LOADING AND UNLOADING EXCLUSION ZONES (LUEZ)

The requirement for loading and unloading exclusion zones (LUEZ) must be assessed for each project/site through the Project Risk Assessment, or alternative risk management process.

LUEZ may be permanently established, or setup as temporary areas, and must:

- Provide separation between people working within a project/site, and trucks being loaded/unloaded;
- Be appropriately signposted/delineated; and
- Be monitored/controlled during loading and unloading activities.

NOTE: LUEZ may form part of a project/location's broader barricading requirements.

The following principles should be applied to Load/Unload Exclusion Zones:

- The equipment used for loading/unloading and persons are segregated (this is to include Drivers);
- Authority for the area resides with the forklift/Crane/Plant operator.

- If the driver, authorised person (i.e. Dogman, Rigger or Spotter) ceases to be in the direct line of sight of the operator at any stage during the activity, the loading/unloading activity should STOP and not resume again until a direct line of sight is reestablished between the operator and the driver or authorised person.
- Where an unauthorised person is identified within the zone, the operation shall be immediately ceased until the person/s is removed.
- All activities associated with the loading / unloading must be contained within the delineated / identified area including all movements of equipment and/or product or combined i.e. turning circle, height, reversing etc. Access / Exit from the Exclusion:
- The control / authority of the Exclusion zone rests with the loading / unloading operator at all times. Entry / exit from this area is only upon prior approval from the operator. Clear rules need to be in place and communicated in relation to LUEZ requirements including but not limited to:
- All personnel other than the loading / unloading operator must NOT be within the LUEZ area during the process of loading / unloading.

Note: Unless an authorised person (Dogman or Rigger) is been used in the task. (the person must at all times be in view of the Operator and not been in a position where they can be effected by the task (i.e. trapped, struck, falling objects etc.).

- The Driver or other personnel must remain in the safety zone or removed to another area by prior agreement with the loading / unloading operator from the LUEZ area i.e. lunch room, office etc.
- The Driver or other Personnel must not enter the LUEZ area without the prior authorization of the loading / unloading operator
- Upon approval and prior to entry / exit of personnel to the LUEZ, product / loads must be made safe, be stationary and lowered.
- No movement of machinery and people is to occur at the same time within the LUEZ



Examples of means of setting up a quick effective LUEZ demarcated in a manner which is fit for purpose for the nature of the loading/unloading environment

3.4.1 DRIVER SAFETY ZONES

If the Driver is required to observe the task, a designated driver safety zones is to be established so that the driver is kept away from any movement of Plant, machinery and the Load.

The driver must remains in them at all times during the task / plant movement, it is recommended that they are located to allow the driver to clearly observe the loading operation.

Safety zones must have visual delineation.




Examples of Delineated Driver Safety Zones

3.5 LOAD RESTRAINT

Loads must be restrained to prevent unsafe movement during all conditions of operation. During restraint of load, the following must be considered:

1. **Fit for Purpose Restraint Equipment** – The load restraint equipment and vehicle body must be suitable for the load that it will be restraining. This also includes checking the equipment before use to ensure it's in good condition.
2. **Apply Correct Restraint System** – The methods of restraint include tie-down, where the load is prevented from moving by friction only, or direct restraint, where the load is prevented from moving by being contained, blocked or attached it to the vehicle.
3. **Use appropriate driving methods** – if restrained correctly, a load will not shift. However, after commencing a journey the load may settle and shift which can cause the load restraints to loosen. Vehicle operators should check the load and the restraint tension shortly after commencing the journey. Drivers must also be aware that the vehicle may operate differently with the load secured on the vehicle.

For more detailed advice on the correct form of restraint, refer to the National Transport Commissions Load Restraint Guide.

3.5.1 ENGINEERED LOAD RESTRAINT

As noted in the FSRs, Non-Standard loads require engineered load restraint, with a non standard load being any load, load configuration, or restraint arrangement that is not covered by the methods, examples, assumptions, and rated equipment described in the NTC Load Restraint Guide, or by a manufacturer-certified restraint system.

The following provides guidance on what would typically trigger the definition of a non-standard load:

1. The load has an **uneven, offset, variable, or difficult-to-verify centre of gravity** that may adversely affect vehicle stability or the effectiveness of the restraint system during transport, loading, or unloading.
2. The load shape, stiffness, fragility, or support condition means the restraint forces **cannot be reliably determined using the standard methods and examples** in the Load Restraint Guide.
3. The load requires **restraint methods, restraint equipment, anchor points, dunnage, cradles, frames, stillages, or support structures** that are not covered by the Load Restraint Guide, not rated for that purpose, or not used in accordance with manufacturer instructions.
4. The restraint relies on **bespoke fabrication, modified transport frames, engineered lifting/transport brackets, custom saddles, transport stools, temporary attachments, or project-specific fixtures**.

5. The load may become unstable, shift, settle, rotate, articulate, or change restraint demand during **application or removal of restraints**, or during transport.
6. Verification of compliance requires **engineering calculation, testing, certification, or design assumptions** beyond those contained in standard load restraint training and the Load Restraint Guide.

3.6 RECORDING LOADS

Where vehicles do not have an On-board mass device/management system installed, a written record must be made to record that the mass and placement of the load do not exceed the mass and dimension requirements of the class of vehicle.

3.6.1 CONTAINER WEIGHT DECLARATION (CWD)

A container weight declaration (CWD) is required when transporting a freight container on a road using a heavy vehicle, regardless of whether the container is loaded or empty.

A CWD is a written declaration of the weight of a container and its contents. This can be either in hard copy or electronic form, or a placard attached to the freight container.

The CWD declaration must contain the following information:

- Weight of the container, including its contents;
- Container number and other details necessary to identify the container;
- Name and residential address, or business name and address, in Australia of the responsible entity for the freight container;
- Date of declaration.

Containers must only be transported on Vehicles fitted with Twist Locks to secure the container to the vehicle

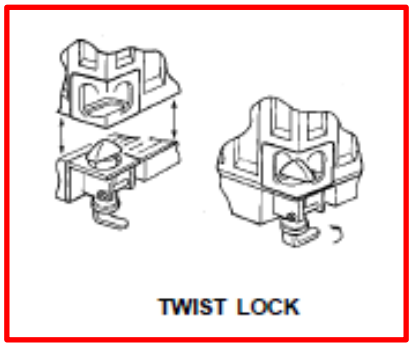

4.0 ADDITIONAL REQUIREMENTS

4.1 HVNL SELF-ASSESSMENT GAP ANALYSIS TOOL

All worksites/projects and Supply Chain Packages are to complete a HVNL Self-Assessment to identify where direct control and/or influence exists. This assessment will identify actual touch points that will align to who has a primary duty to ensure, 'as low as reasonably practicable (ALARP)', the safety of road transport operations in which they are involved.

Identified Touch Points from the HVNL Self-Assessment must be represented within the CoR Risk Assessment.

4.2 RACI – RESPONSIBLE ACCOUNTABLE CONSULTED OR INFORMED

The RACI chart forms the basis of the individual Position Descriptions of those with specific HVNL responsibilities and is to be included / referenced in the CoRMP. The RACI identifies those responsible and accountable for HVNL obligations enabling and understand of their roles and responsibilities and identifies who is:

- Responsible for doing the work
- Accountable for ensuring the work is completed properly
- Consulted about the work
- Informed about the outcomes of the work or task.

4.3 SUPPLY CHAIN CONTRACTS

When engaging a Contractor, the HVNL Self-Assessment, shall be completed by the Supply Chain and reviewed by Laing O'Rourke. to confirm understanding of roles and responsibilities and identify any gaps or misunderstanding in accountabilities.

The CoR/HVNL requirements of this Primary Standard shall form part of the Supply Chain contracts.

5.0 ASSURANCE

The Project Director and Executive Management are responsible for the conduct and performance of Laing O'Rourke, its Supply Chain partners and their Subcontractors. They have an important role in providing leadership, direction and monitoring the performance of the Supply Chain partners compliance with the HVNL. Laing O'Rourke and its Supply Chain partners must have in place appropriate governance and internal control mechanisms to ensure that information required to manage the safety of the heavy vehicle's operations of Laing O'Rourke, its Supply Chain and their Subcontractors to monitor compliance is available to key decision makers in Laing O'Rourke. As a minimum, the governance arrangements must ensure that the Laing O'Rourke Worksite/ Project Leader and the Executive Management obtain sufficient knowledge of:

- The heavy vehicle risks and controls in place to manage those risks;
- The level of HVNL compliance levels being achieved;
- The effectiveness of systems and controls to determine whether risks are being identified, assessed, eliminated and controlled;
- Controls used to monitor safety are regularly being reviewed and revised. The heavy vehicle risks and controls in place to manage those risks

5.1 MONITORING AND INSPECTION

Heavy Vehicle assurance/monitoring activities must be included in the project 30-60-90 assessment. As a minimum, this must include a representative sample of the following Intelex inspections:

- Fatal and Severe Risk (FSR) Heavy Vehicles
- Fatigue Management Inspection Checklist
- Load Restraint Inspection Checklist
- Mass and Dimension Inspection Checklist
- Vehicle Condition Inspection Checklist

The CoRMP will detail the requirements for regular inspections and monitoring of the level of compliance. Any inspection requirements will be added to the relevant workplace/project inspection schedule and tracked accordingly.

6.0 ROLES AND RESPONSIBILITIES

Table 1 Chain of Responsibility Roles and Responsibilities

ROLE	RESPONSIBILITIES
CONSIGNOR	A person named as 'consignor' on transport documentation, or if there is no such person identified, the person who engages a heavy vehicle's operator (directly or indirectly) or has possession of or control over the goods immediately before they are transported by road, or the person who loads or imports goods.
PRIME CONTRACTOR	A person who engages someone to drive a heavy vehicle under a contract. For example, a logistics business that engages a Supply Chain Partners to transport goods.
EMPLOYER	A person or institution responsible for or employs another person responsible for controlling or directing the use of a heavy vehicle, whether or not they are actually present for any of the transport activities
TRANSPORT OPERATOR	A person who is responsible for controlling or directing the use of a heavy vehicle, for example a manager of the business that has control over or directs where and when a heavy vehicle travel.
DRIVER	A driver of a heavy vehicle. Includes a person who is sharing the task of driving during the journey, a person driving under instruction and a person instructing a driver who is under instruction.
REGISTERED OPERATOR	The registered operator in relation to a heavy vehicle is the person recorded in the registrable heavy vehicles register as the person responsible for the heavy vehicle
SCHEDULER	Any person who schedules transport of any goods or passengers by heavy vehicle, or the work and rest times of drivers. This may extend to include any person who dictates the scheduling (e.g. pick-up, delivery or transit time).
PACKER	A person who puts goods into packaging or assembles packaged goods into outer packaging (even if the packaging is already on a heavy vehicle) or supervises/manages/controls such an activity.
LOADER	A person who loads goods into a heavy vehicle or container or loads a container onto a heavy vehicle.
LOADING MANAGER	A person who controls, manages or supervises (directly or indirectly) the loading or unloading of heavy vehicles at a regular loading/unloading premises, or is responsible for the operations of such premises, or has been assigned such responsibilities
UNLOADER	A person who unloads goods out of a heavy vehicle or container or unloads a container from a heavy vehicle.
CONSIGNEE	A person named as 'consignee' on transport documentation, or who actually receives the goods after their road transport (but does not include a person who merely unloads the goods).
RELEVANT DIRECTOR	A director for, or a person concerned with the management of a corporation responsible for controlling or directing the use of a heavy vehicle, whether or not you are actually present for any of the transport tasks.
PROJECT LEADER/ WORKPLACE MANAGER	A Project Leader / Workplace Manager for, or a person concerned with the management of a corporation responsible for controlling or directing the use of a heavy vehicle, whether or not you are actually present for any of the transport tasks.
SUPPLY CHAIN PARTNER	A Contractor, Supplier or Sub-Contractor who exercise (or have the capability of exercising) direct or indirect control or influence over any transport task. Responsibilities are outlined within the Laing O'Rourke, Contractor, Sub-Contractors and their Supply Chain Partners (All parties) CoR Management Plans along with being listed out in the Performance Guide Section of this

7.0 ASSESSMENT GUIDES

- National Heavy Vehicle Classification Guide
- Vehicle Condition Guide.

8.0 REGULATIONS, CODES AND STANDARDS

Key legislation, codes and standards relating to this primary standard are outlined the Laing O'Rourke Health and Safety Legal Register.

9.0 COMPLIANCE AND ASSURANCE REFERENCE

- Heavy Vehicle National Legislation – Self Assessment
- Load Restraint Assessment Tool
- Mass and Dimension Assessment Tool
- Vehicle Condition Assessment Tool
- FSR Assessment Tool – Heavy Vehicle.

10.0 ADDITIONAL INFORMATION

For additional information about Heavy Vehicle Management see:

- HSE Information Sheet – Loading and Offloading Vehicles.

11.0 PLANS, FORMS AND TEMPLATES

For relevant plans, forms and templates see the Laing O'Rourke HSEMS at www.lorhsems.com.

12.0 APPENDICES

Appendix 1 - Definitions

Appendix 2 – Tipper Guidance

12.1 APPENDIX 1 – DEFINITIONS

Term	Definition
ADR	Australian Design Rule
Advanced Fatigue Management (AFM)	AFM brings a genuine risk management approach to managing heavy vehicle driver fatigue. Rather than prescribing work and rest hours, AFM offers more flexibility than Standard Hours or BFM in return for the operator demonstrating greater accountability for managing their drivers' fatigue risks.
AFM	Advanced Fatigue Management
ATM	Aggregate Trailer Mass
Basic Fatigue Management (BFM)	Operators with BFM accreditation can operate under more flexible work and rest hours, allowing for (among other things) work of up to 14 hours in a 24-hour period. BFM gives operators some flexibility in when drivers can work and rest, as long as the risks of driver fatigue are properly managed.
BFM	Basic Fatigue Management
Consignor	Under the HVNL, you are generally classified as a consignor of goods when you engage a heavy vehicle operator (through an agent or other party) to transport your goods (consignment) to a consignee (such as a buyer receiving your goods) by road for commercial purposes. You will usually be named and identified as the consignor in the formal documentation for the road transport of the goods. For additional information, see the Consignor HVNL Fact Sheet
CoR	Chain of Responsibility
CWD	Container Weight Declarations
Fatigue regulated bus	Means a heavy motor vehicle that weighs more than 4.5t and built or fitted to carry more than 12 adults (including the driver).
Fatigue related vehicle	Means any of the following: • a motor vehicle with a GVM of more than 12t; • a combination with a GVM of more than 12t; • a fatigue-regulated bus. A vehicle **DOES NOT** to meet this definition if: • the vehicle is built, or has been modified, to operate primarily as a machine or implement off-road, on a road-related area, or on an area of road that is under construction; and • is not capable of carrying goods or passengers by road; Examples include agricultural machine, backhoe, bulldozer, excavator, forklift, front-end loader, grader. A truck, or a combination including a truck, that has a machine or implement attached to it is a fatigue-regulated heavy vehicle— • if the GVM of the truck or combination with the attached machine or implement is more than 12t; and • whether or not the truck or combination has been built or modified primarily to operate as a machine or implement off-road, on a road-related area, or on an area of road that is under construction. Example - truck to which a crane or drilling rig is attached

12.2 APPENDIX 2 - TIPPER GUIDANCE

1. Material is loaded into the centre of tipper bodies.
2. A minimum 15m Exclusion zone is in place around tippers when they are unloading.
3. The ground is firm, level, and free of crossfall or rutting.
4. A truck and trailer must be in a straight line before tipping to minimize angular offset.
5. Ensure Tailgates are open and material flow confirmed in the early stages of raising the tipper.
6. Consider Environmental conditions such as excessive wind pushing on trailer laterally.

GO Conditions	No-Go Conditions
Ideal Conditions Even Load on solid / even ground	**Uneven Load** (Off-centre loads aren't tipped)
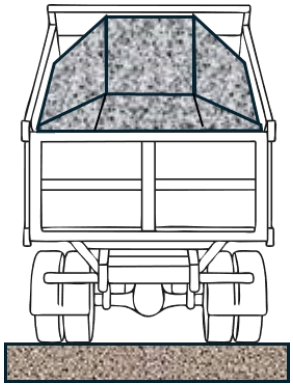	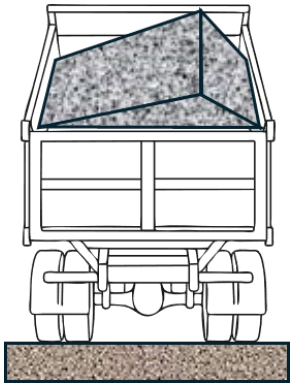
Tailgate Indicator / Leaver (Tailgate unlocked before unloading)	**Slope of Ground** (Side slope for truck/trailer configuration is <4%)
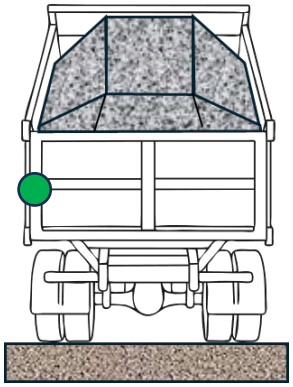	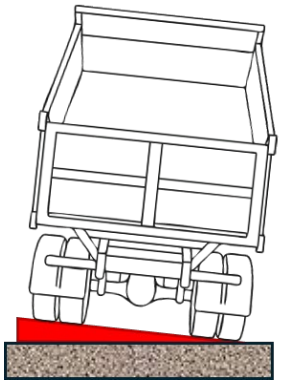
Alignment of Truck (Straight Line – Dollys and truck/trailer)	**Uneven Ground** (Pot holes or loose material aren't present while tipping)
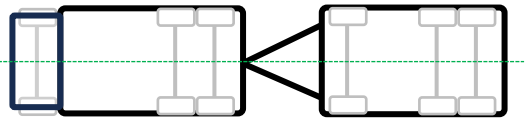	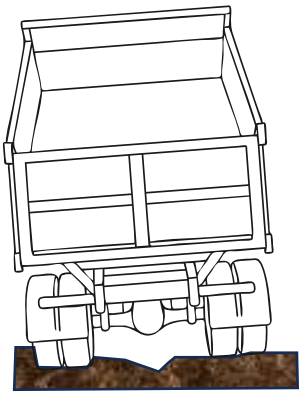

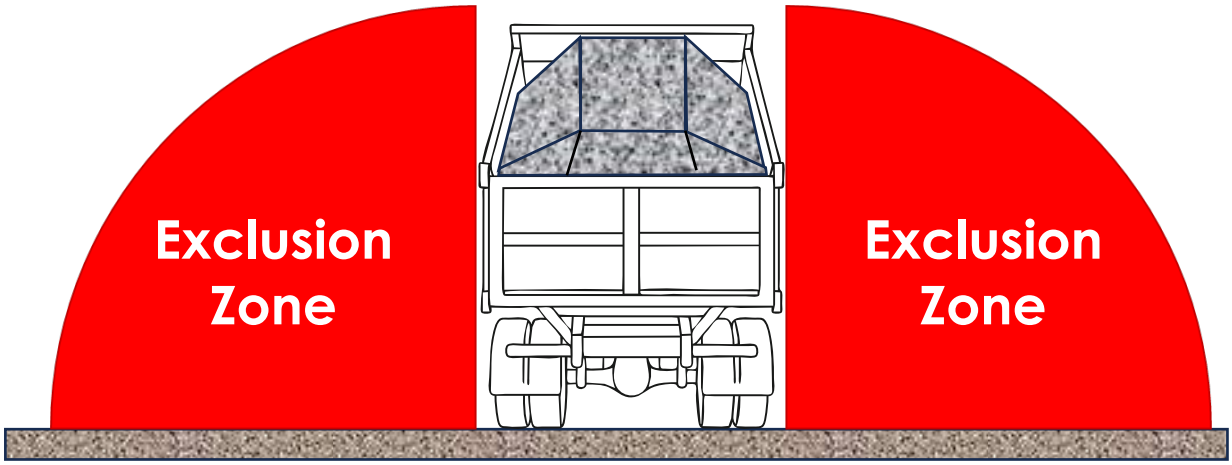
Exclusion Zone
Exclusion Zone